SAVE THESE INSTRUCTIONS

NOTE: Check all parts for shipping damage. In case of shipping damage, DO NOT use. Contact carrier/dealer for further instruction.

To ensure the safe installation, operation and use of the Reliant Scale, these instructions MUST be followed:

⚠ WARNING

DO NOT use this product without first completely reading and understanding these instructions and any additional instructional material such as owner's manuals, service manuals or instruction sheets supplied with this product or optional equipment. If you are unable to understand the warnings, cautions or instructions, contact a healthcare professional, dealer or technical personnel before attempting to use this equipment - otherwise, injury or damage may occur.

After any adjustments, repair or service and before use, make sure all attaching hardware is tightened securely - otherwise injury or damage may occur.

⚠ ACCESSORIES WARNING

Invacare products are specifically designed and manufactured for use in conjunction with Invacare accessories. Accessories designed by other manufacturers have not been tested by Invacare and are not recommended for use with Invacare products.

Kit Description

PART NO	DESCRIPTION	QTY
1117147	Load Cell Assembly	1
1064338	Nylon Washers	2
1080975	Swivel Bar Pin	1
1008882	Locknut	1
1092593	Mounting Screw	1
1065214	Small Steel Washer	1
1119556	1/8-inch thick nylon washer (9805 lift)	2
1119555	1/4-inch thick nylon washer (450/600 lbs lift)	2

Specifications

WEIGHT RANGE:	Up to 600 lbs (272.7 kg)
RESOLUTION:	+/- 0.2 lbs (.1 kg)
DISPLAY:	Liquid Crystal Digital
AUTOMATIC POWER DOWN	Two minutes
SIZE:	5-3/4 L x 3-5/8 W x 4 H
WEIGHT:	1.55 lbs
POWER:	Nine volt alkaline battery (Included)
BATTERY LIFE:	Approximately 1500 readings
TEMPERATURE RANGE:	50° to 104° F (10° to 40° C)

For more information regarding Invacare products, parts, and services, please visit www.invacare.com

Remove the Swivel Bar

⚠ WARNING

Invacare slings and patient lift accessories are specifically designed to be used in conjunction with Invacare patient lifts. Slings and accessories designed by other manufacturers are not to be utilized as a component of Invacare's lift system.

NOTE: For this procedure, refer to FIGURE 1.

NOTE: The Reliant Scale cannot be used in conjunction with the swivel bar supplied with the Invacare 9805 Lift. The Reliant Swivel Bar (Part No. 1064518) MUST be purchased and installed on the Invacare 9805 lift in order to install the Reliant Scale.

1. Perform one of the following:
   - For 450 lbs and 600 lbs Reliant Lifts - Remove shoulder bolt, locknut, pinch guard and washer which secure the swivel bar to the boom mounting bracket.

   NOTE: Save the shoulder bolt and locknut to secure the Reliant Scale to the boom. The pinch guard will not be used when the scale is installed. Save pinch guard for future use of swivel bar without scale.

   - For Model No. 9805 Lift - Remove shoulder bolt and locknut which secure the swivel bar to the boom mounting bracket.

   NOTE: Save the shoulder bolt and locknut to secure the Reliant Scale to the boom.

NOTE: Removing the swivel bar hardware will release the swivel bar, two nylon washers and the swivel bar pin. Save the swivel bar pin and the two nylon washers for future use of the swivel bar without the scale.

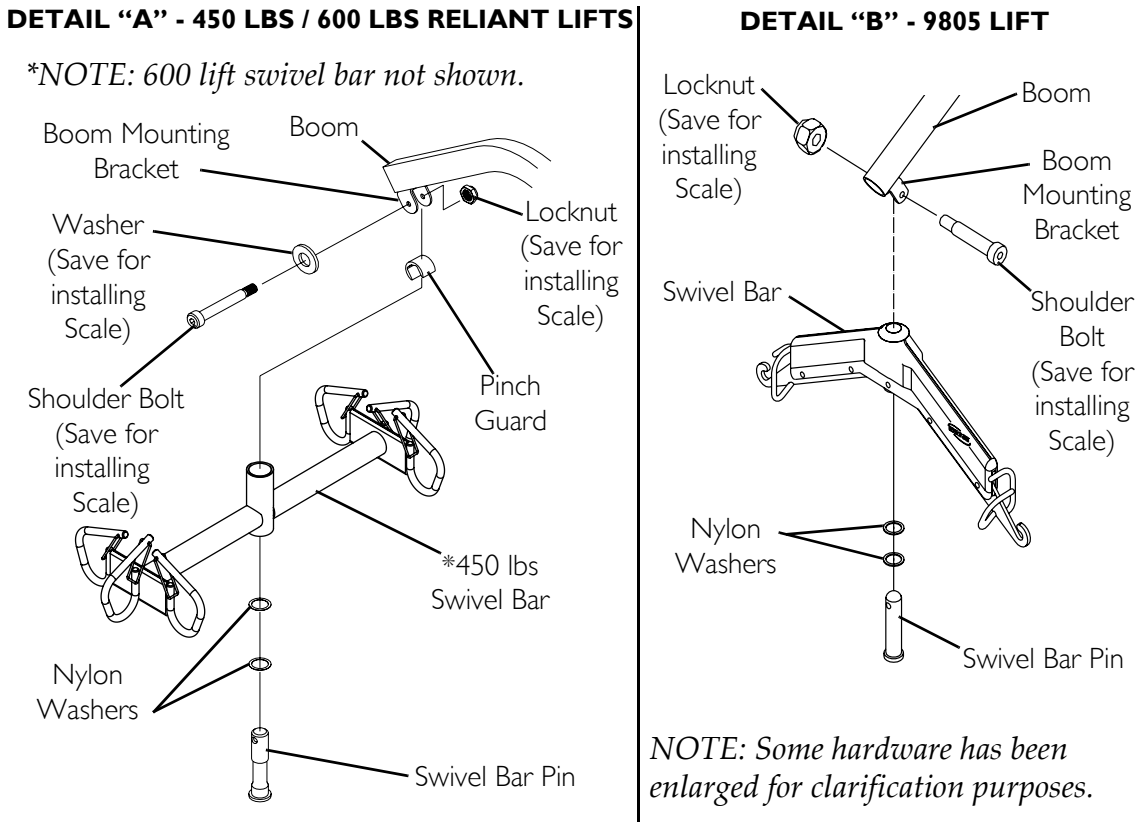

FIGURE 1 Remove the Swivel Bar

Install the Reliant Scale

NOTE: For this procedure, refer to FIGURE 2.

1. Position the load cell assembly of the Reliant Scale into the boom mounting bracket. Refer to Detail "A" in FIGURE 2.

NOTE: For 9805 lift use 1/8-inch thick nylon washer. For 450 lbs/600 lbs lifts use 1/4-inch thick nylon washer.

2. Secure the Reliant Scale to the boom mounting bracket with a shoulder bolt, one small steel washer, two nylon washers and a locknut. Securely tighten. Refer to Detail "A" in FIGURE 2 for washer orientation.

NOTE: Ensure the shaft of the shoulder bolt passes through both sides of the boom mounting bracket.

3. Insert swivel bar pin with two nylon washers through the swivel bar. Refer to Detail "B" in FIGURE 2.
4. Align the mounting holes in the swivel bar pin with the mounting holes in the load cell assembly. Refer to Detail "B" in FIGURE 2.
5. Secure swivel bar pin to the load cell assembly with the provided mounting screw and locknut. Securely tighten. Refer to Detail "B" in FIGURE 2.
6. Weigh the patient. Refer to Operating the Scale on page 4.

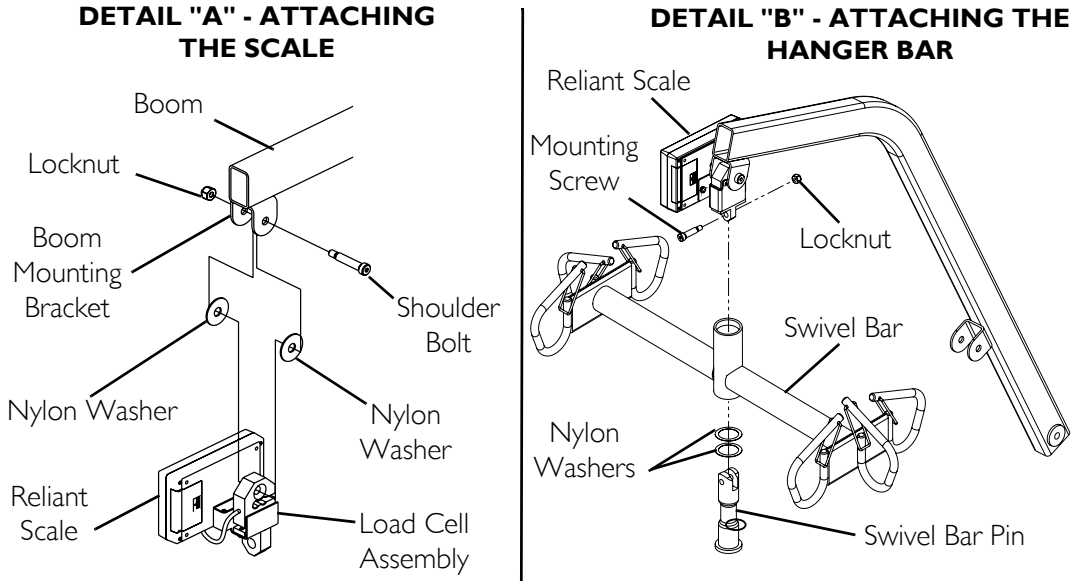

FIGURE 2 Install the Reliant Scale

Operating the Scale

Keypad functions

NOTE: For this procedure, refer to FIGURE 3.

CAUTION

DO NOT operate keypad with pointed objects (i.e. pencils, pens, fingernails, etc.) - otherwise damage to the key pad will result.

KEY	INDICATOR DISPLAYED	INDICATOR LOCATION	DEFINITION
ON OFF	OFF	Center of Display Window	Pressing this key will apply power to the scale and turn the unit on. When the scale is already on, pressing the button will turn the unit off.
ZERO	ZERO	Lower Left Corner of the Display Window	Pressing this key when the scale is on will reset the weight shown in the display window to zero.
UNITS		Lower Right Corner of the Display Window	The function of this key is to change the unit of measurement from pounds (lbs) to kilograms (kg).
LOCK UNLOCK	LOCK	Lower Right Corner of the Display Window	This key is used to lock or unlock a weight value in the display window. *Note: Weight displayed is a stored weight and not the current weight when the key is used in the lock position.*
N/A	LO BAT	Center of Display Window	Indicator is shown in the display window to notify when battery is low.

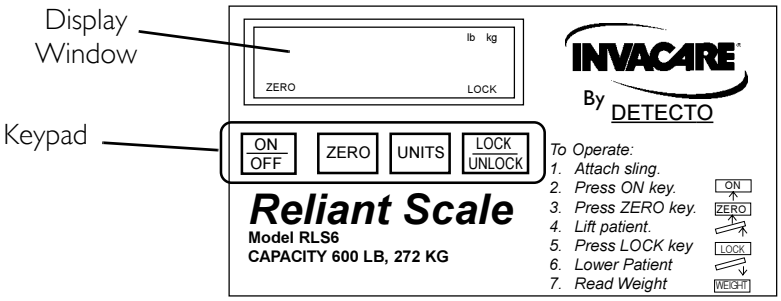

FIGURE 3 Operating the Scale - Keypad functions

Weighing the Patient

⚠ WARNING

The weight capacity is limited to the lowest rated capacity of any one of the components in use (i.e. Patient Lift, Sling or Scale). The patient's weight MUST NOT exceed the lowest rated capacity of any component.

1. Attach sling straps to the swivel bar. For proper attachment instructions, refer to the Sling Owner's Manual - Part No. 1023891.

NOTE: For improved accuracy on the 450 and 600 Reliant lifts, attach all sling straps to the center hooks on both sides of the swivel bar. However, patient comfort may require a different configuration of sling straps.

2. Press the On/Off key.

NOTE: The display will indicate the last weight that was measured. The word "LOCK" will be seen in the display box.

NOTE: The ZERO key is pressed in order to avoid capturing the weight of the sling and the hardware. If the ZERO key is not pressed the weight of the sling and the weight of the hardware will be included in the weight displayed. Not zero-ing out will give a false reading of the user's true weight.

3. Press the ZERO key. When the ZERO key is pushed the following will happen:
   A. The scale will reset to zero and the word "ZERO" will appear in the display.
   B. The lock function will then be turned off and the word "LOCK" will disappear from the display.

NOTE: The scale is now active and continually updating the weight display.

4. Place the patient in the sling. For patient placement instructions, refer to the Sling Owner's Manual - Part No. 1023891.

⚠ WARNING

When elevated a few inches off the surface of a stationary object (bed, chair or commode) and before moving the patient, check to make sure that the sling is properly connected to the hooks of the swivel bar. If any attachments are NOT properly in place, lower the patient back onto the stationary surface and correct this problem - otherwise, injury or damage may occur.

5. Activate the lift mechanism to raise the patient until they are completely supported by the lift.
6. Note the weight display.
7. When the weight display becomes stable press the LOCK button to lock the weight display. This will be indicated by the word "LOCK" appearing in the display window.

NOTE: Should it be necessary to unlock the weight while the patient is still supported by the lift, the UNLOCK button may be pressed. The weight will unlock and the word "LOCK" will disappear from the display window. The weight value will then be updated. Once the weight becomes stable the weight can be locked again by pressing the LOCK button.

NOTE: Stable being defined as the weight fluctuating ± two-tenths of a pound. For example, a patient weighing one hundred pounds - the scale will fluctuate between 99.8 and 100.2 until the LOCK key is pressed. Fluctuation of the weight displayed is normal as noted above. Press the LOCK button to lock the weight.

NOTE: The UNITS button may be pressed to toggle between units of pounds and kilograms. This is indicated by lbs or kg appearing in the display window.

8. The lift may now be lowered and the sling removed from the patient.

NOTE: The patient's weight will continue to be seen in the display window.

NOTE: The display will turn off automatically after a two minute period of non-use [no changes in weight exceeding five pounds (two kilograms)]. You can not adjust the time delay for automatic shut off.

NOTE: After the display has turned off, the weight may be recalled by pressing the ON/OFF button.

NOTE: The unit can be turned off by pressing the ON/OFF button a second time.

Replacing the Battery

NOTE: For this procedure, refer to FIGURE 4.

NOTE: The scale is powered by a nine volt alkaline battery that should provide approximately 1500 readings before needing replacement.

When battery replacement is needed, LO BAT will appear on the display. Perform the following:

1. Slide the battery door open in the direction of the arrow.
2. Remove existing battery.
3. Install new battery.
4. Reinstall the battery door.

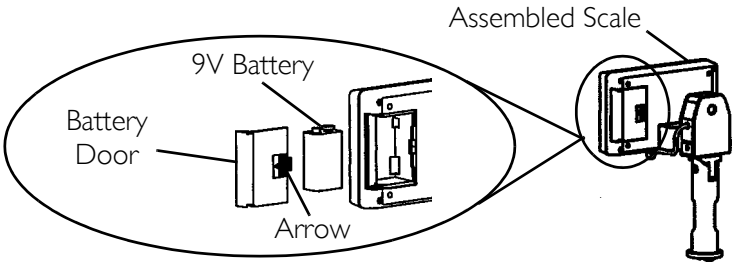

FIGURE 4 Replacing the Battery

Calibrate the Reliant Scale

NOTE: For this procedure, refer to FIGURE 5 on page 7.

NOTE: The Reliant Scale will be pre-calibrated at the factory with the load cell. Should it be necessary to re-calibrate the scale, follow the instructions outlined below.

1. The patient and the sling MUST be removed from the scale to properly calibrate the Reliant Scale. Refer to Operation in the Patient Lift Owner's Manual for further instructions.
2. For sling detachment instructions, refer to Lifting the Patient in the Patient Lift Owner's Manual.
3. Turn the scale display power on by pressing the ON/OFF key.
4. Rotate the Swivel Bar until the back of the scale display is visible.
5. Insert the tip of a paper clip or similar tool into the small hole on the back of the scale display and press the CAL button.

NOTE: Once the CAL button is pressed, "CAL1" will be seen in the display window.

6. Press the UNITS key. The display reads CAL2.

7. Press the LOCK/UNLOCK key. The display reads UNLD.
8. Press the ZERO key. The display reads LOAD.
9. Hang 200 pounds of calibrated weight from the scale and press the ZERO key.
10. Press the ZERO key. The display reads DONE.
11. Remove the weight. Press the LOCK/UNLOCK key.

NOTE: The scale is now in test mode.

12. Press the ZERO key. The display reads 0.00 lb.

NOTE: The scale will now be in normal operation.

BACK VIEW OF THE SCALE DISPLAY

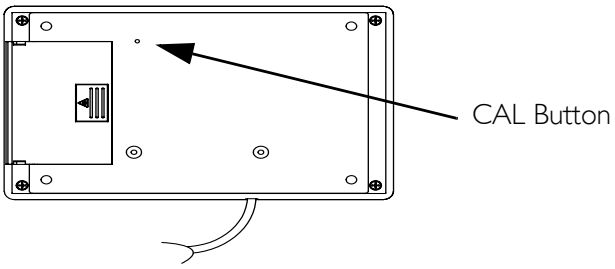

FRONT VIEW OF SCALE DISPLAY

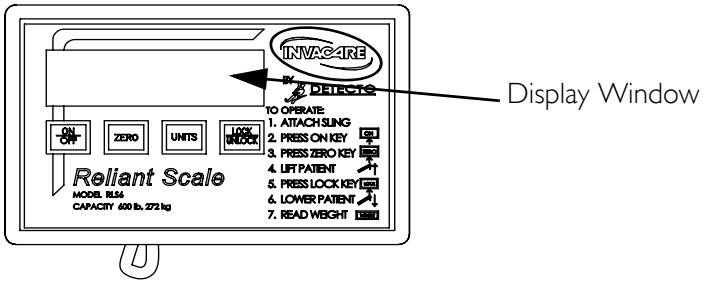

FIGURE 5 Calibrate the Reliant Scale

Troubleshooting

SYMPTOM	PROBABLE CAUSE	SOLUTIONS
Unit does NOT work properly.	Battery failure.	Check battery. Replace if necessary.
Battery has been replaced and unit still does NOT work properly.		Contact Invacare for Service at 1-800-333-6900.

Display Codes

CAL Calibration Required - Indicates improper stored calibration data, calibration is necessary.

OCAP Over Capacity - Indicates a weight exceeding the capacity has been loaded on the scale.

LIMITED WARRANTY

PLEASE NOTE: THE WARRANTY BELOW HAS BEEN DRAFTED TO COMPLY WITH FEDERAL LAW APPLICABLE TO PRODUCTS MANUFACTURED AFTER JULY 4, 1975.

This warranty is extended only to the original purchaser/user of our products.

This warranty gives you specific legal rights and you may also have other legal rights which vary from state to state.

Invacare warrants the products manufactured (excluding the 9V battery) to be free from defects in materials and workmanship for a period of one year from the date of purchase. If within such warranty period any such product shall be proven to be defective, such product shall be repaired or replaced, at Invacare's option. This warranty does not include any labor or shipping charges incurred in replacement part installation or repair of any such product. Invacare's sole obligation and your exclusive remedy under this warranty shall be limited to such repair and/or replacement.

For warranty service, please contact the dealer from whom you purchased your Invacare product. In the event you do not receive satisfactory warranty service, please write directly to Invacare at the address on the back cover, provide dealer's name, address, date of purchase, indicate nature of the defect.

Invacare Corporation will issue a serialized return authorization. The defective unit or parts MUST be returned for warranty inspection using the serial number, when applicable as identification within 30 days of return authorization date. DO NOT return products to our factory without our prior consent. C.O.D. shipments will be refused; please prepay shipping charges.

LIMITATIONS AND EXCLUSIONS: THE FOREGOING WARRANTY SHALL NOT APPLY TO SERIAL NUMBERED PRODUCTS IF THE SERIAL NUMBER HAS BEEN REMOVED OR DEFACED, PRODUCTS SUBJECTED TO NEGLIGENCE, ACCIDENT, IMPROPER OPERATION, MAINTENANCE OR STORAGE, PRODUCTS MODIFIED WITHOUT INVACARE'S EXPRESS WRITTEN CONSENT (INCLUDING, BUT NOT LIMITED TO, MODIFICATION THROUGH THE USE OF UNAUTHORIZED PARTS OR ATTACHMENTS; PRODUCTS DAMAGED BY REASON OF REPAIRS MADE TO ANY COMPONENT WITHOUT THE SPECIFIC CONSENT OF INVACARE, OR TO A PRODUCT DAMAGED BY CIRCUMSTANCES BEYOND INVACARE'S CONTROL, AND SUCH EVALUATION WILL BE SOLELY DETERMINED BY INVACARE. THE WARRANTY SHALL NOT APPLY TO PROBLEMS ARISING FROM NORMAL WEAR OR FAILURE TO ADHERE TO THE INSTRUCTIONS IN THIS MANUAL.

THE FOREGOING WARRANTY IS EXCLUSIVE AND IN LIEU OF ALL OTHER EXPRESS WARRANTIES. IMPLIED WARRANTIES, IF ANY, INCLUDING THE IMPLIED WARRANTIES OF MERCHANTABILITY AND FITNESS FOR A PARTICULAR PURPOSE, SHALL NOT EXTEND BEYOND THE DURATION OF THE EXPRESSED WARRANTY PROVIDED HEREIN AND THE REMEDY FOR VIOLATIONS OF ANY IMPLIED WARRANTY SHALL BE LIMITED TO REPAIR OR REPLACEMENT OF THE DEFECTIVE PRODUCT PURSUANT TO THE TERMS CONTAINED HEREIN. INVACARE SHALL NOT BE LIABLE FOR ANY CONSEQUENTIAL OR INCIDENTAL DAMAGES WHATSOEVER.

SOME STATES DO NOT ALLOW EXCLUSION OR LIMITATION OF INCIDENTAL OR CONSEQUENTIAL DAMAGE, OR LIMITATION ON HOW LONG AN IMPLIED WARRANTY LASTS, SO THE ABOVE EXCLUSIONS AND LIMITATIONS MAY NOT APPLY TO YOU.

THIS WARRANTY SHALL BE EXTENDED TO COMPLY WITH STATE OR PROVINCIAL LAWS AND REQUIREMENTS.

Invacare Corporation www.invacare.com

USA
One Invacare Way
Elyria, Ohio USA
44036-2125
800-333-6900

Canada
570 Matheson Blvd. E Unit 8
Mississauga Ontario
L4Z 4G4 Canada
800-668-5324

Yes, you can.

All rights reserved. Trademarks are identified by ™ and ®. All trademarks are owned by or licensed to Invacare Corporation unless otherwise noted.

© 2008 Invacare Corporation

Part No 1114832

Rev D - 10/08